Preliminary

Marktech Optoelectronics

Shortwave Infrared Light Photo Reflector

Product No: **MTRS5016C**

Peak Emission Wavelength: 1625nm

The MTRS5016C reflective sensor consists of a 1625nm infrared emitter and high sensitivity InGaAs photodiode in the same package. The black molded housing reduces the effect of external ambient light. Custom emitter/detectors are available.

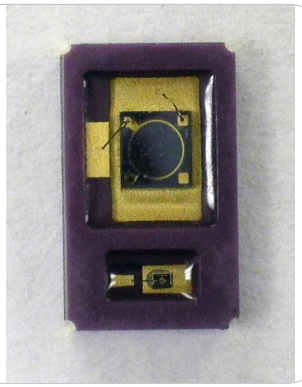

FEATURES

> High Reliability
> 5.1 x 3.3mm Surface Mount Package
> Short Detection Distance Optimum 0.5-1.5mm

APPLICATIONS

> Card Reader
> Bar-code Reader
> Edge Sensing / Money-bill Reader

Absolute Maximum Ratings (Ta=25°C)

ITEMS	SYMBOL	RATINGS	UNIT
Forwad Current (LED)	IF	40	mA
Pulse Forward Current (LED)*1	IFP	0.5	A
Reverse Voltage (LED)	VR	5	V
Power Dissipation (LED)	PD	100	mW
Reverse Voltage (PD)	VR (IR=10uA)	3	V
Reverse Current (LED)	IR (VR=5V)	10	uA
Operating Temperature Range	Topr	-20 to +80	°C
Storage Temperature Range	Tstg	-30 to +100	°C

*1: Tw=10μsec, T=10msec.

Electrical & Optical Characteristics (Ta = 25°C)

ITEMS	SYMBOL	CONDITIONS	MIN	TYP	MAX	UNIT
Forward Voltage (LED)	VF	IF=20mA	--	0.7	--	V
Peak Emissions Wavelength (LED)	λp	IF=20mA	--	1625	--	nm
Spectral Line Half Width (LED)	Δλ	IF=20mA	--	120	--	nm
Power Output (LED)	PO	IF=20mA	--	0.42	--	mW
Reverse Dark Current (Iceo)	ID	VR=1V	--	2.0	--	uA
Light Current @1300nm	IL	λ=1300nm; VR=2V	--	180	--	uA
Shunt Resistance	RSH	VR=10mV	--	2	--	MΩ
Sensitivity Range	V	VR=0V	600	--	1750	nm
Responsivity	R	λ=1550nm	--	0.70	--	A/W
Quantum Efficiency	QE	λ=1660nm	--	55	--	%
Total Capacitance	CT	VR=0V	--	60	--	pF
Rise/Fall Time (10 to 90%)	Tr, Tf	VR=10V, IF=20mA, RL=1KΩ	--	--	--	uS

2019-01-15

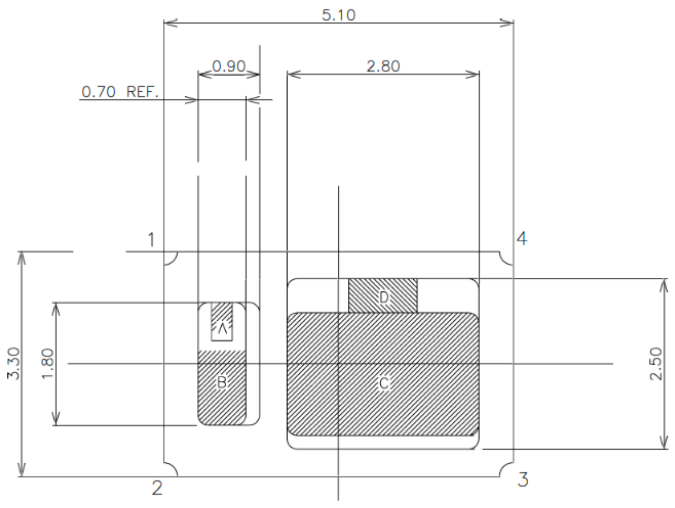

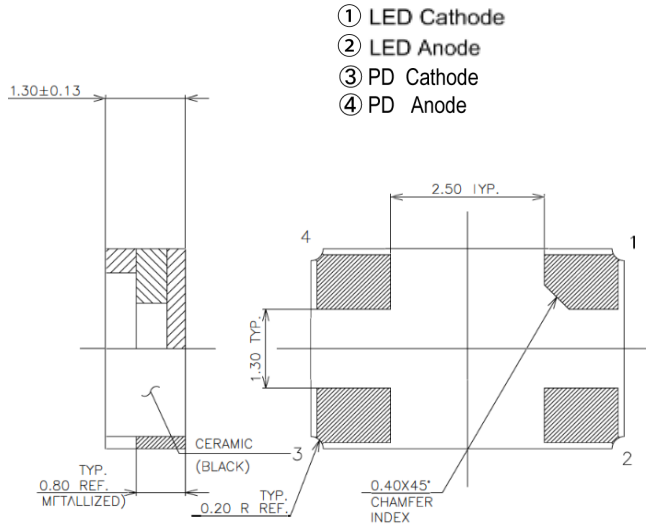

Unit: mm, Tolerance: ±0.2

2019-01-15

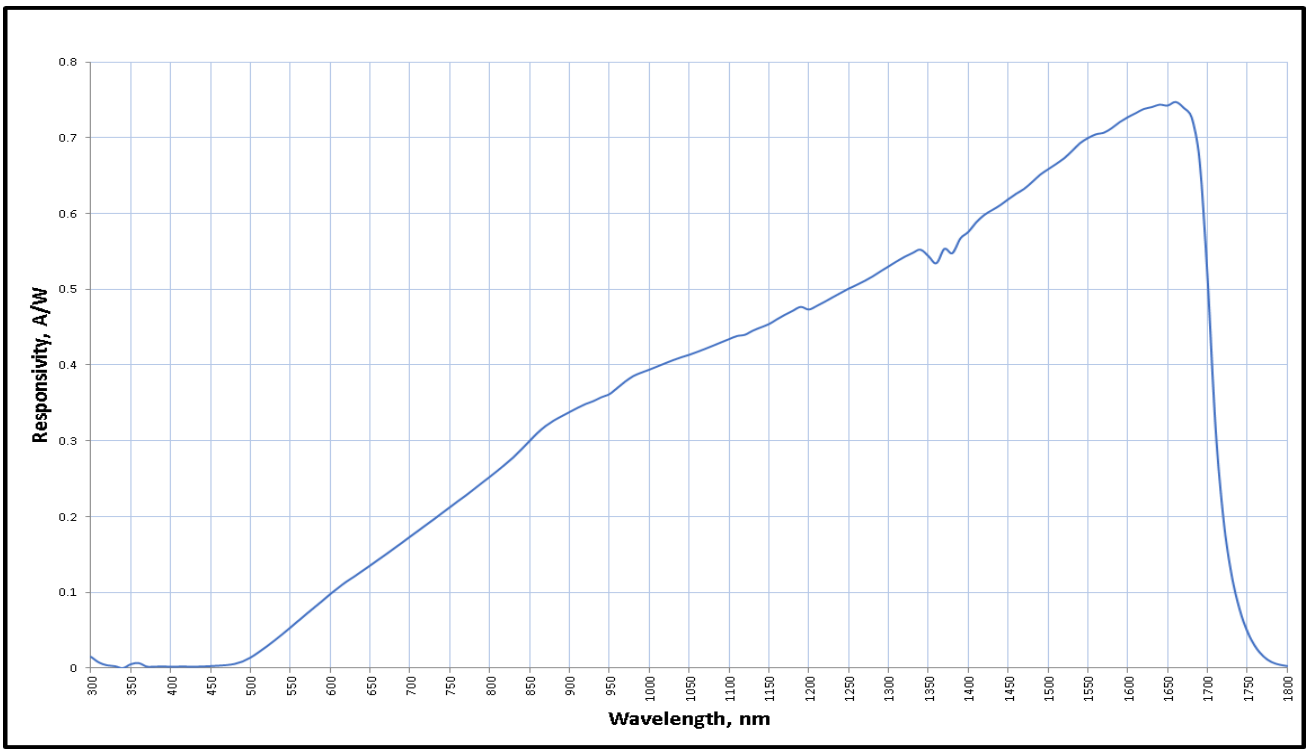
Responsivity, A/W
0
0.1
0.2
0.3
0.4
0.5
0.6
0.7
0.8
300 350 400 450 500 550 600 650 700 750 800 850 900 950 1000 1050 1100 1150 1200 1250 1300 1350 1400 1450 1500 1550 1600 1650 1700 1750 1800
Wavelength, nm

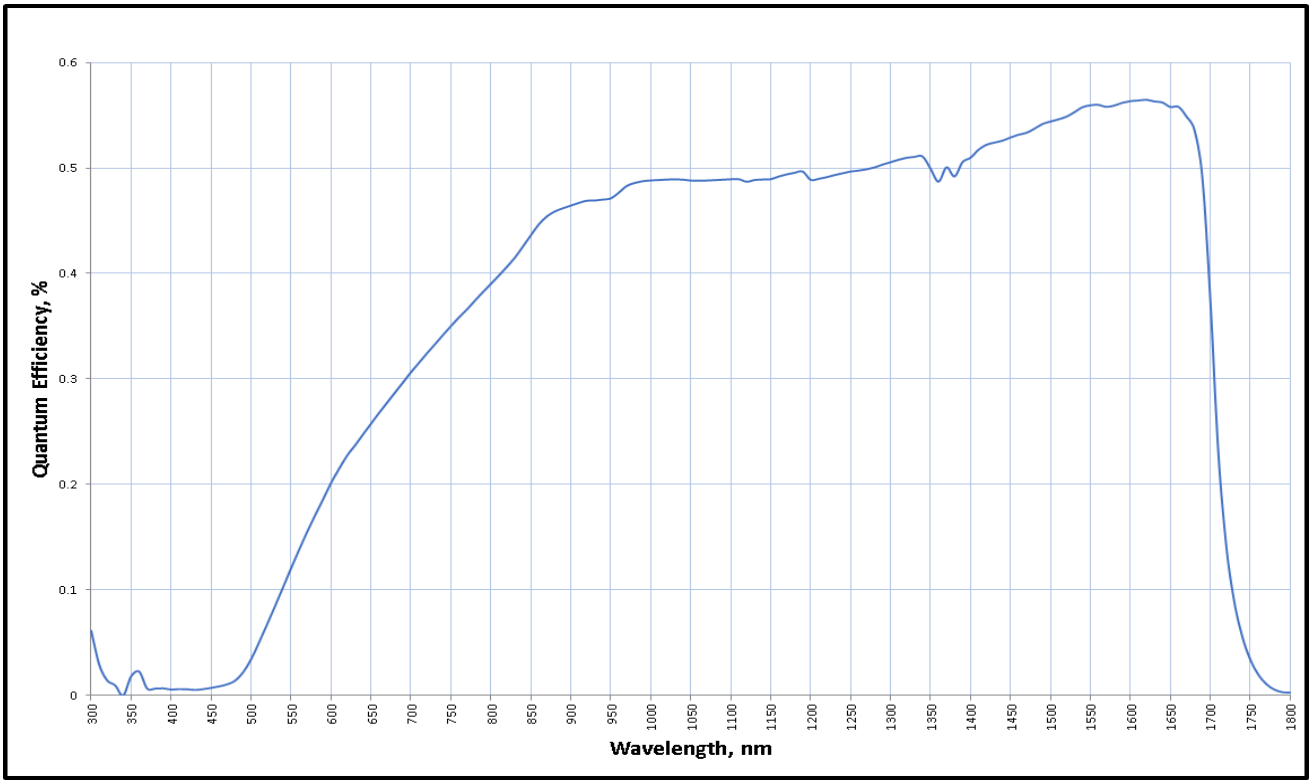
Quantum Efficiency, %
0
0.1
0.2
0.3
0.4
0.5
0.6
300 350 400 450 500 550 600 650 700 750 800 850 900 950 1000 1050 1100 1150 1200 1250 1300 1350 1400 1450 1500 1550 1600 1650 1700 1750 1800
Wavelength, nm

2019-01-15